PRODUCT DATASHEET

Spiral Winding Membrane Making Machine

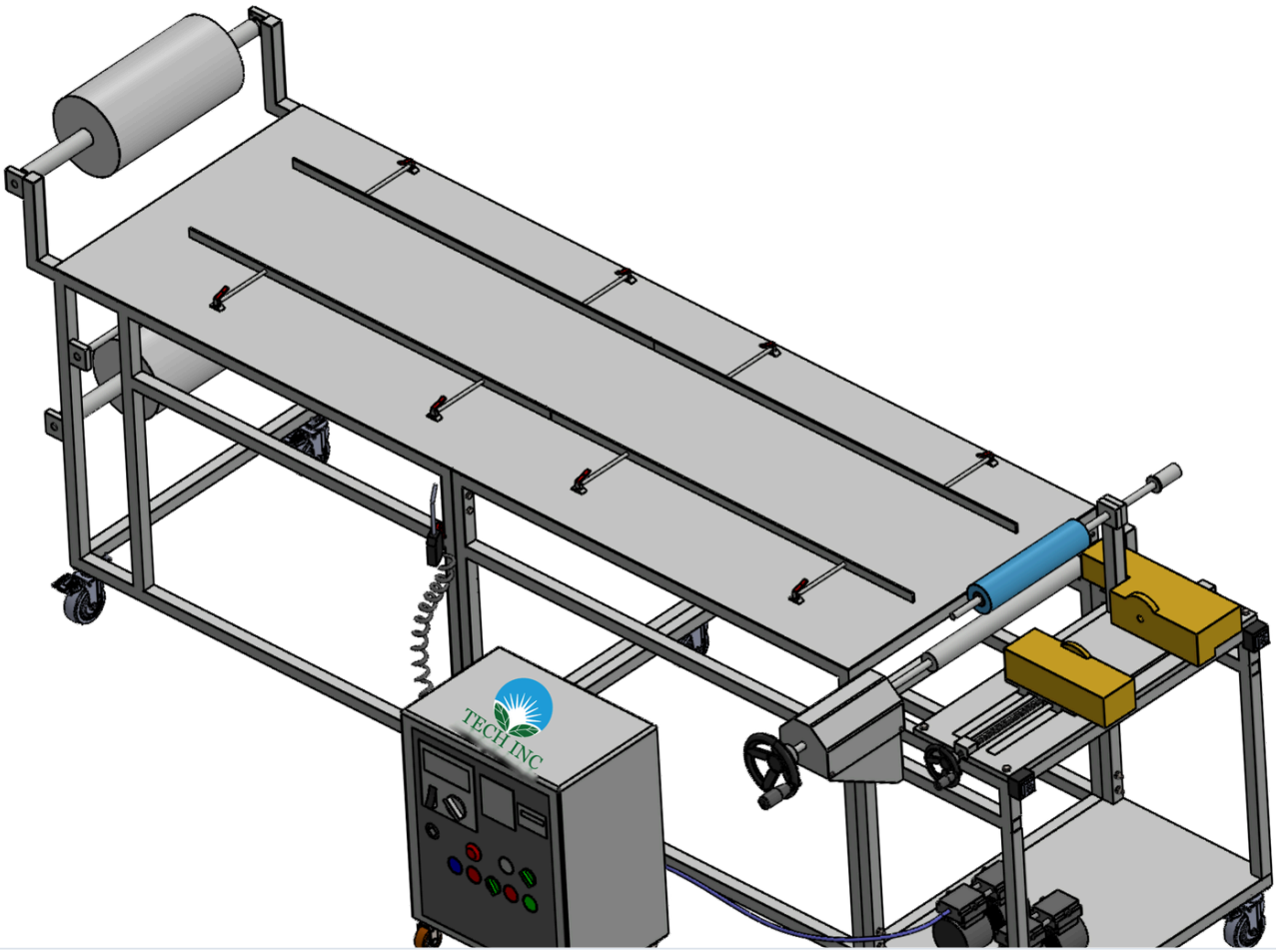

OVERVIEW

Tech Inc. Spiral Winding Membrane Making Machine produces hollow fibre membranes through advanced spiral winding technology. This equipment enables consistent production of high-performance hollow fibre membranes for water treatment, biotech applications, and advanced separation processes.

APPLICATIONS

Hollow fibre membrane production for microfiltration applications; ultrafiltration membrane manufacturing for water purification systems; nanofiltration membrane production for advanced separation processes.

KEY ADVANTAGES

- Precision spiral winding mechanism for uniform fibre bundle geometry
- Variable winding speed accommodating different fibre materials and specifications
- Integrated fibre tension control maintaining optimal fibre arrangement
- Multi-fibre capability producing complex membrane bundles in single operations
- Programmable winding patterns for customised membrane architectures

How to cite: Spiral Winding Membrane Making Machine (Tech Inc., Vaughan, Ontario, Canada). www.techincresearch.com/products/spiral-wound-module-making/spiral-winding-machine

Designed and built by Tech Inc. · **Part of the Davey Group since 1990**

Offices: Chennai · Toronto · Tallinn · Al Khobar

mail@techincresearch.com · +1 (289) 622-1032 · www.techincresearch.com

Disclaimer: All products, designs and content are the property of Tech Inc. Tech Inc. reserves the right to change specifications and details without notice. Images are for representation only; the supplied equipment may differ in appearance. Data are typical; final design to client specification.